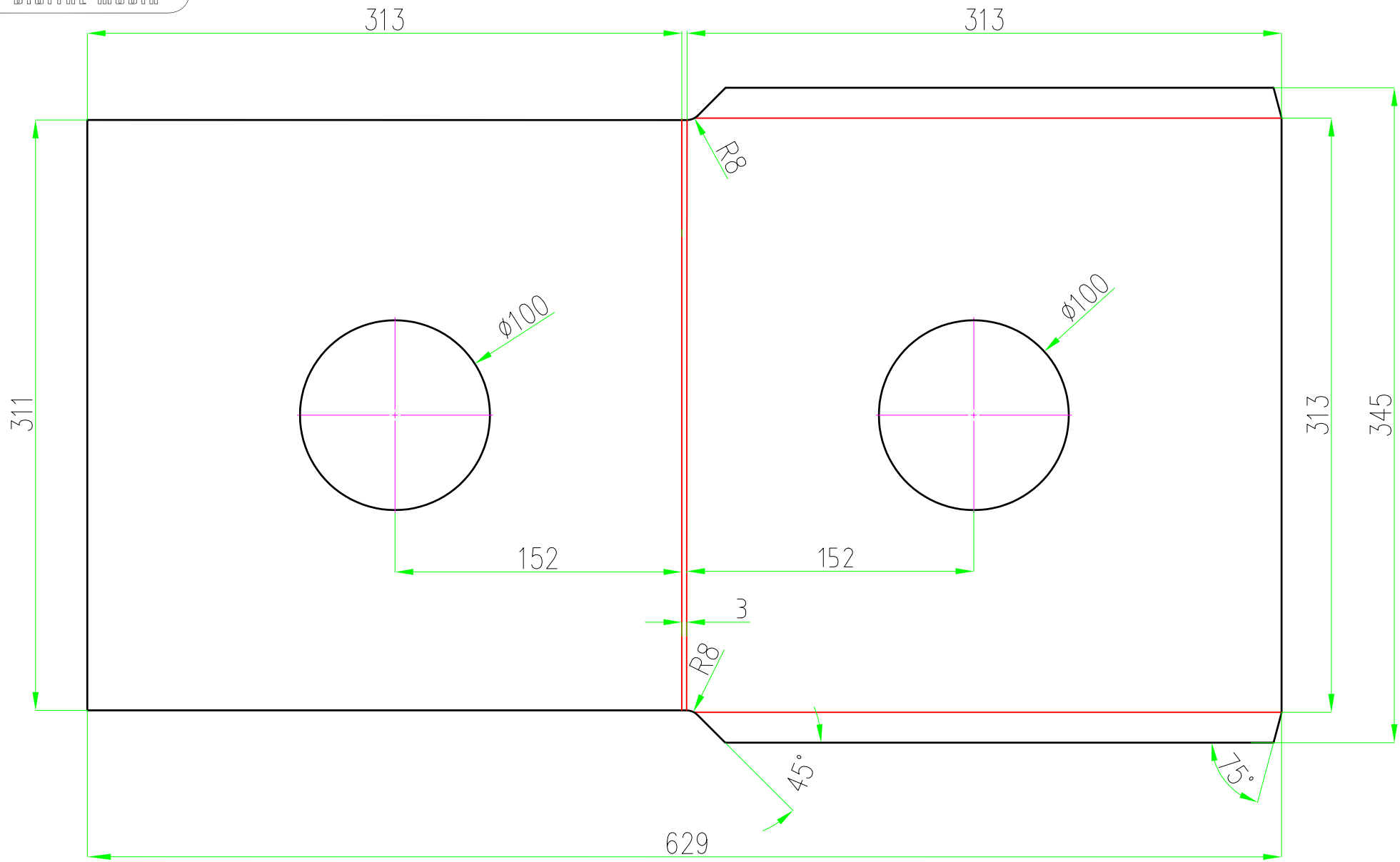

Code description: 12" Cover, 2 Centre holes	Mat: Cardboard	Addition for bleed 3mm	Line width:min. 0,1 mm	Code: LPOVO	standard print.Varnish LPOVOUV...uv Varnish LPOVOL...Laminate
	Paper weight: 280 gr White/white, White/grey	Colouring: CMYK+1	Screening: 150 Lpi		
		Font size:min.6 PT	Modification:Varnish,UV,lam		